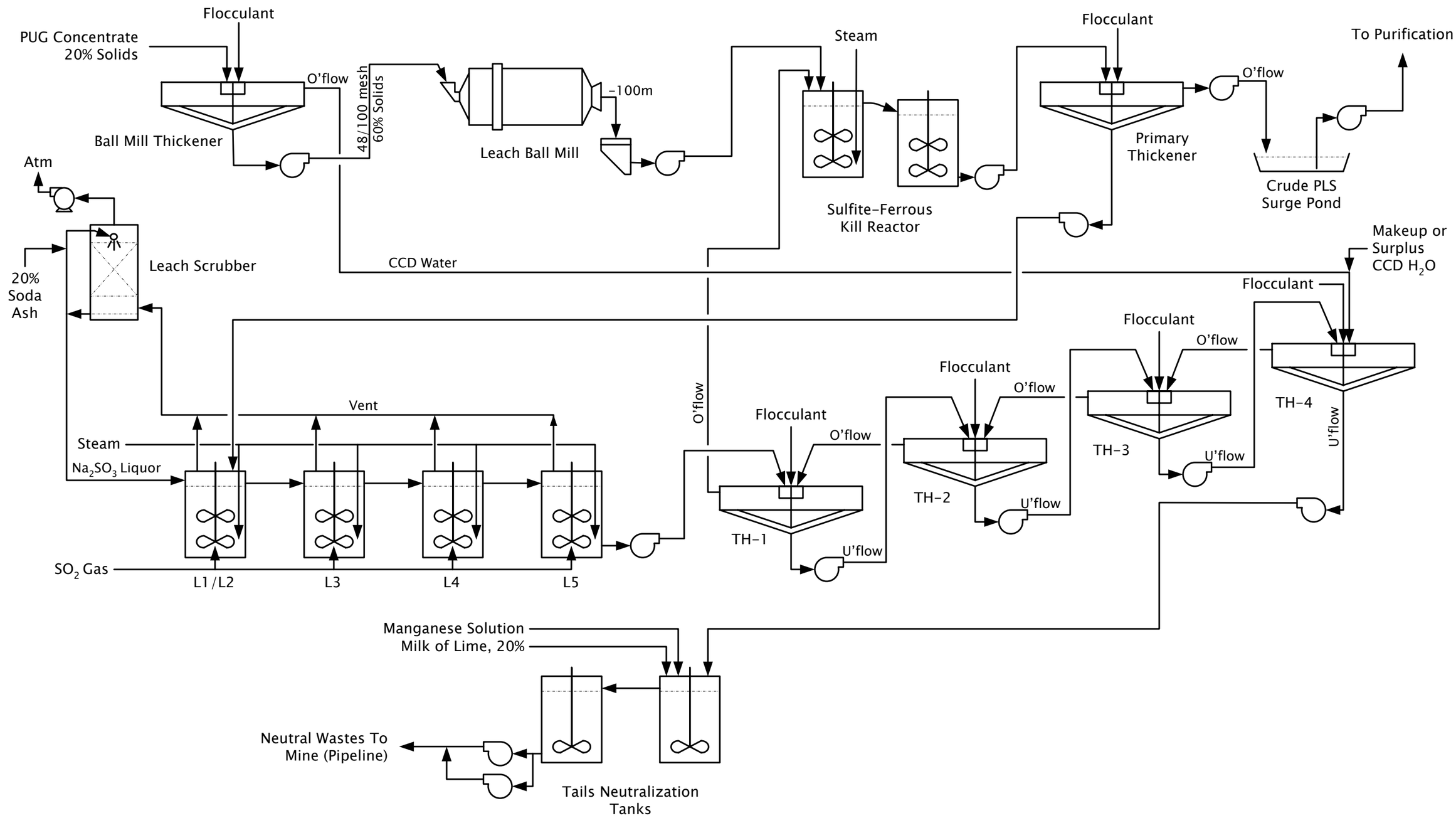

Figure 8

Figure ##. Geovic Cobalt SO_2 Process Flow Diagram (Area 300)